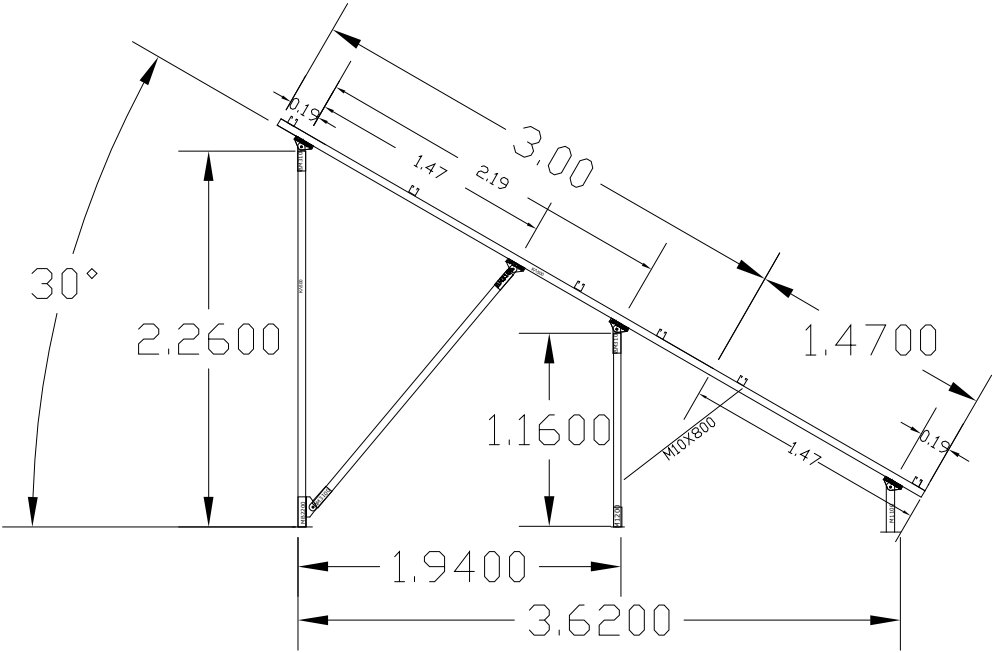
3.00
0.19
1.47
2.19
30°
2.2600
1.4700
1.1600
M10X800
1.47
0.19
1.9400
3.6200